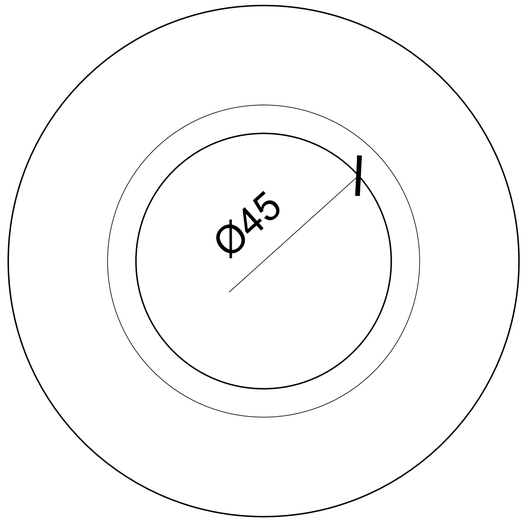

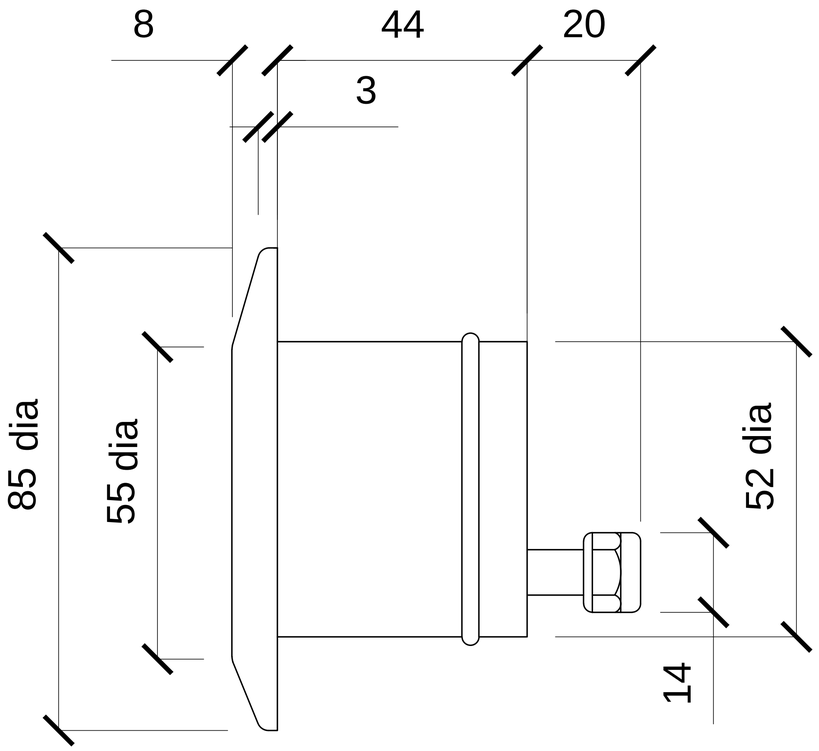

Paramount Pools Ltd. Fosters Business Pk, Old School Road, Hook, Hants. 01256 748380	WT 1 - LED - UWL	Round	23/12/2015

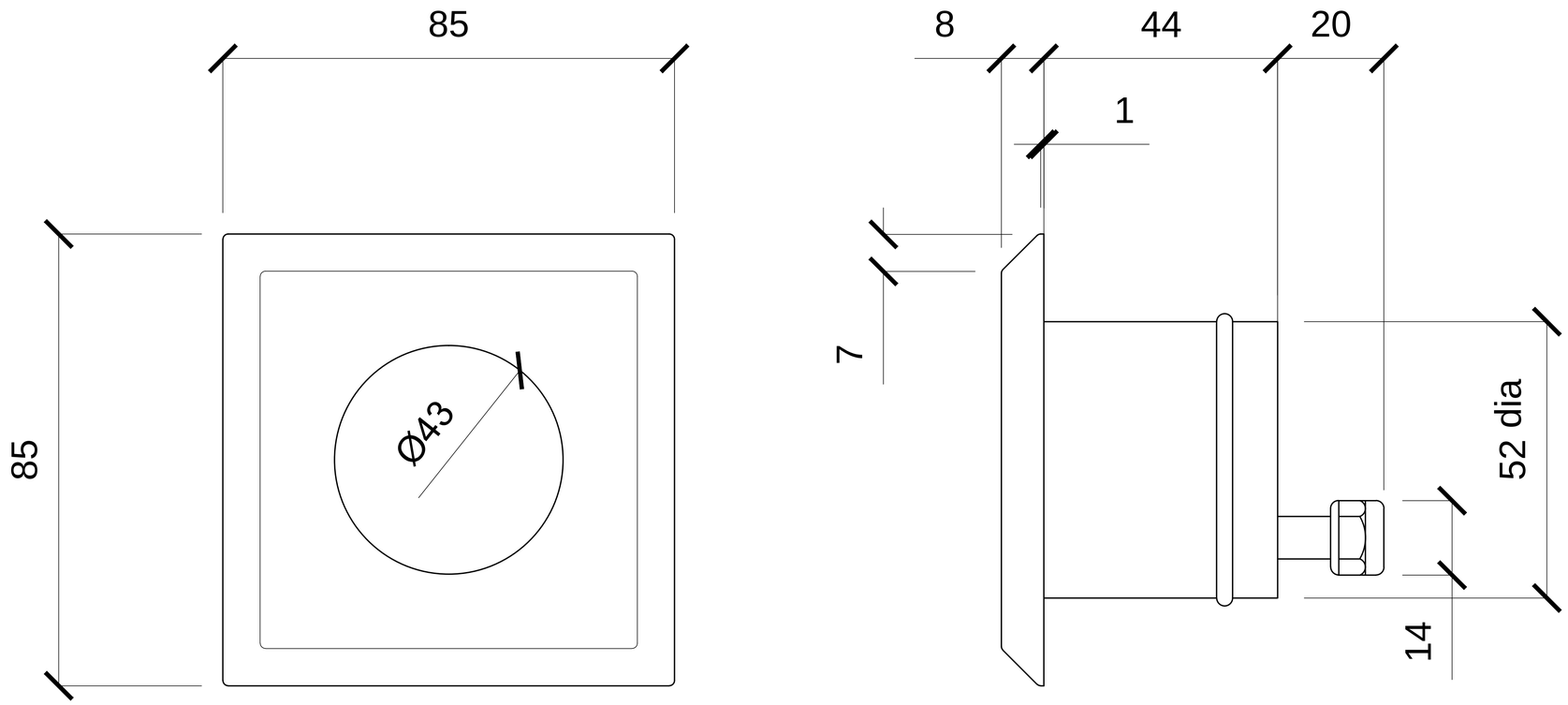

Paramount Pools Ltd. Fosters Business Pk, Old School Road, Hook, Hants. 01256 748380	WT 1 - LED - UWL	Square	23/12/2015